Important: Read all instructions prior to installation.

Vapor Tight LED Light Fixture 4 Foot

Dimensional Drawing

VTLM-NW4-x-x

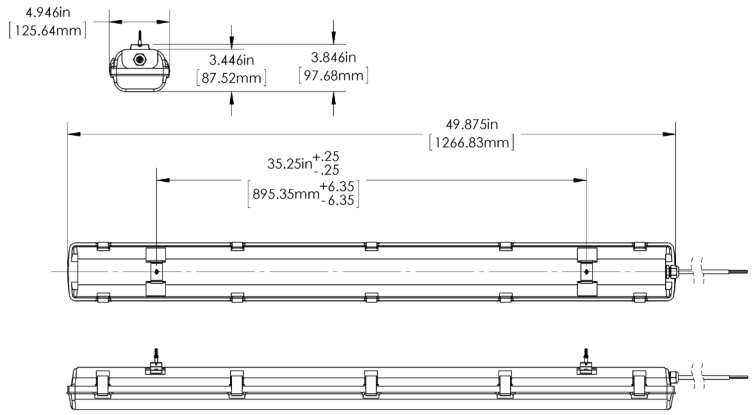

INCLUDED PARTS

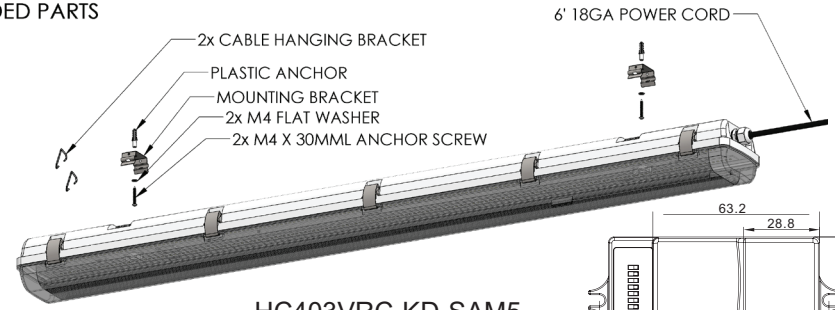

HC403VRC-KD-SAM5

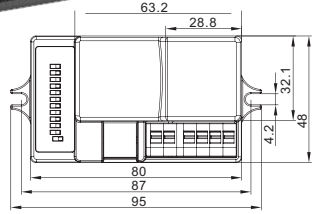

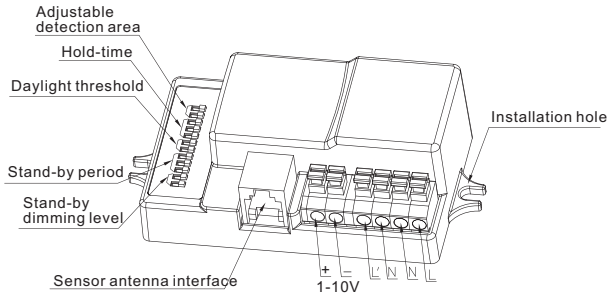

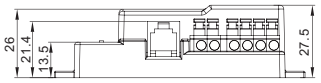

Mechanical structure (mm)

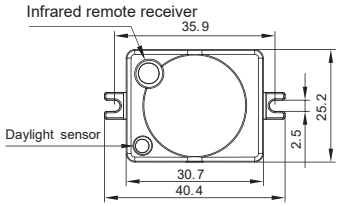

Rev Date: V1 08/03/2017 4400 Earth City Expy, St. Louis, MO 63045 • 866-590-3533 • superbrightleds.com

superbrightleds.com

Vapor Tight LED Light Fixture 4 Foot

VTLM-NW4-x-x

Installation Manual

UL LISTED

superbrightleds.com

User Manual

Part Number:

VTLM-NW4-x-x

Important: Read all instructions prior to installation.

Vapor Tight LED Light Fixture 4 Foot

Specifications

	VTLM-NW4-52-x	VTLM-NW4-65-x
Intensity	6800 lm	8200 lm
Operating Voltage Range	100~277 VAC	100~277 VAC
Total Power Consumption	52 Watts 456mA	65 Watts 581mA
Beam Angle	120 degree	120 degree
Color Temperature	5000 K	5000 K
CRI	84	84
Operating Temperature	-4~122°F (-20~50 °C)	-4~140°F (-20~60 °C)
IP Rating	IP65	IP65
LED Lifetime	50000 Hours	50000 Hours
Fixture Weight	6 lbs 11 oz (3.03Kg)	6 lbs 16 oz (3.17Kg)
Standards and Certifications	ETL / RoHS	ETL / RoHS
Warranty	5 Years	5 Years

Included Parts

1 - Vapor Tight LED Light Fixture (VTLM-NW4-x-x)

2 - Mounting Brackets

2 - Drywall Anchors

2 - M4x 30mm long anchor screws

2 - M4 Flat washers

2 - Triangle Cable Hanger

Recommended Parts

Included at superbrightleds.com

Optional Motion Sensing Kit (HC403VRC-KD-SAM5)

Power Cord (_POWERCORD)

Suspension Kit (VTLM-HKO)

SJT Cable - Black Jacketed 18 Gauge (WP18-35J)

22-12 AWG Orange/Blue 3M Wire Nut (WN-OB2212)

Motion Sensor Installation (cont.)

8. Wire Sensor with included instructions (HC403VRC-KD-SAM5). Wire fixture in accordance with national, state, local and electrical codes. Consult with an electrician.

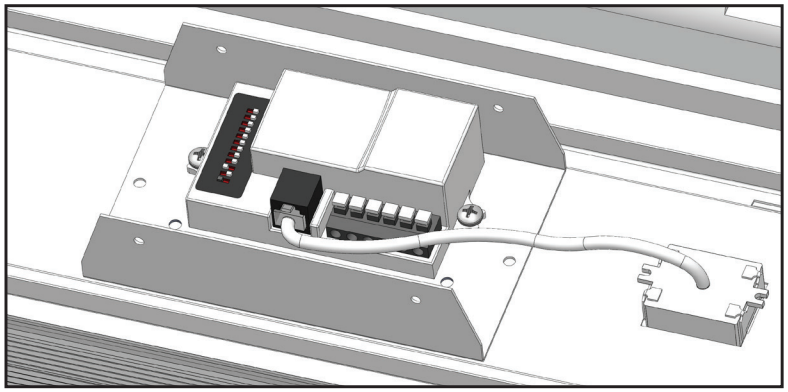

*See motion sensing manual for wiring and operation (HC403VRC-KD-SAM5)

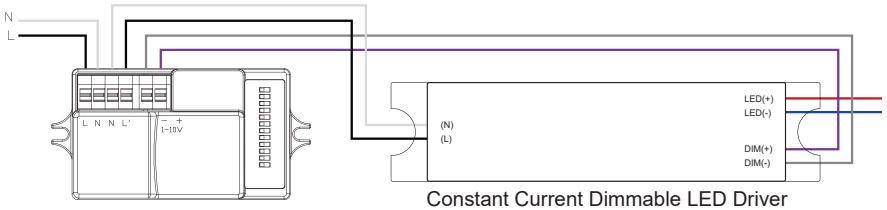

Sensor Control Module

Constant Current Dimmable LED Driver

FIG 14

9. Re-attach Cover over wire connections.
10. Re-attach Reflector and twist to lock into place.
11. Re-attach Diffuser and secure with Metal Latches (x10). (FIG 15)

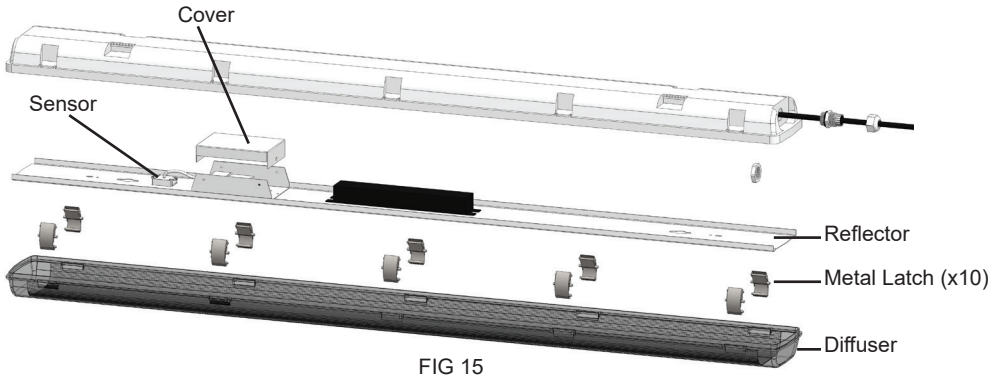

FIG 15

Rev Date: V1 08/03/2017

4400 Earth City Expy, St. Louis, MO 63045 • 866-590-3533 • superbrightleds.com

Cable Mount Installation

1. Light fixture arrives out-of-box assembled.
2. Mark locations to for Surface Mount Cable Attachment. (FIG 3)
3. Attach Surface Mount Cable Attachment to surface with #8 flat head screw (use anchors if required but not included).
4. Attach Triangle Cable Hanger to holes on side of Mounting Bracket.
5. Attach Mounting Brackets to Vapor Tight LED Fixture. (FIG 4)
6. Loop cable through Triangle Cable Hanger and secure with Cable Lock and M3 screws provided.
7. Wire fixture in accordance with national, state, local and electrical codes. Consult with an electrician.

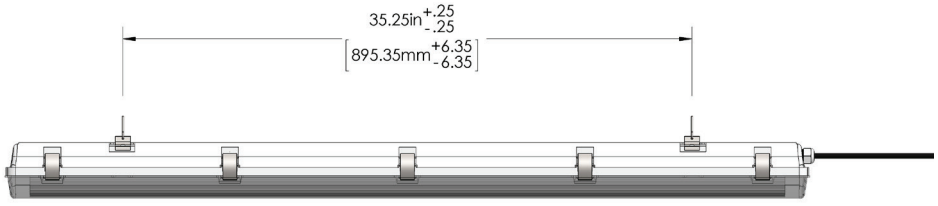

FIG 3

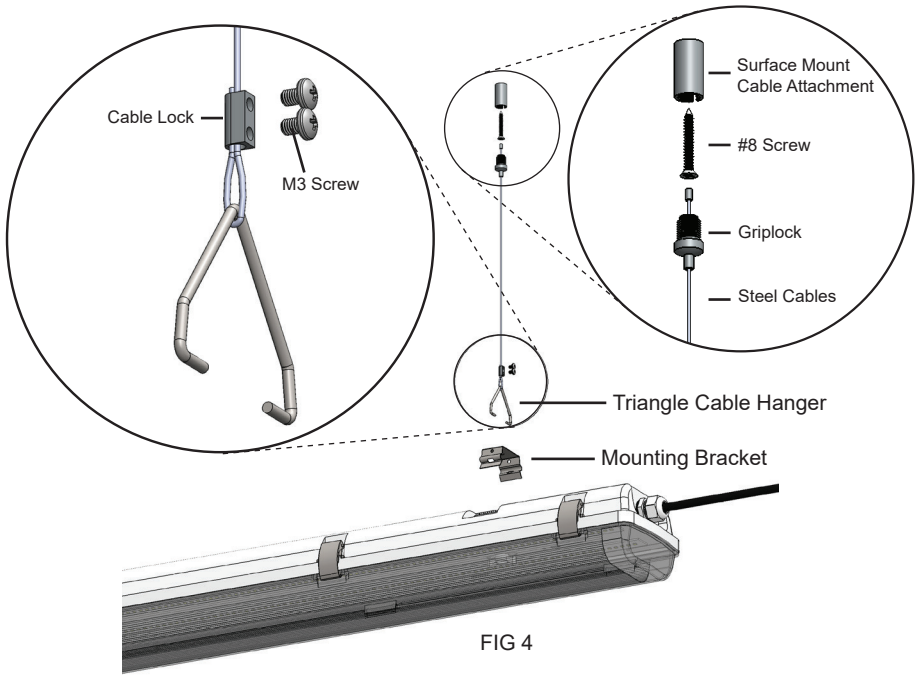

FIG 4

Daisy Chain Installation

1. Release Metal Latches (x10) and remove Diffuser.
2. Twist Locks on Reflector and Remove Reflector.
3. Knock-out hole at other end of fixture.
4. Attach Liquid-tight Cord Grip body into knock-out hole and secure with plastic nut provided. (FIG 6)
5. Insert SJT Cable (WP18-35J) into through Liquid-tight Cord Grip body and secure with Liquid-tight Cord Grip Collar. (FIG 6)
6. Wire fixtures internal wiring in accordance with national, state, local and electrical codes. Consult with an electrician.
7. Re-attach Reflector and twist to lock into place.
8. Re-attach Diffuser and secure with Metal Latches (x10). (FIG 7)

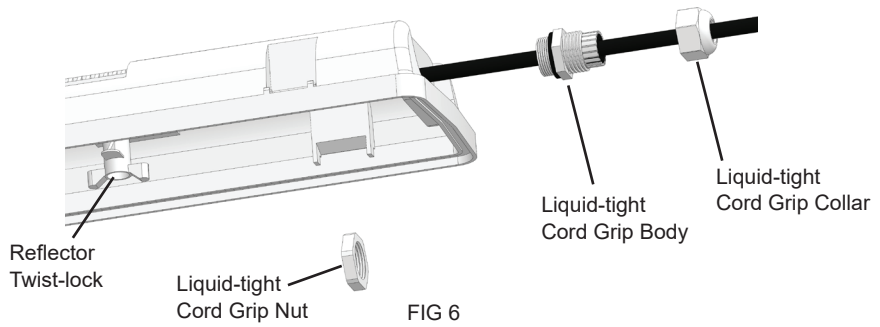

FIG 6

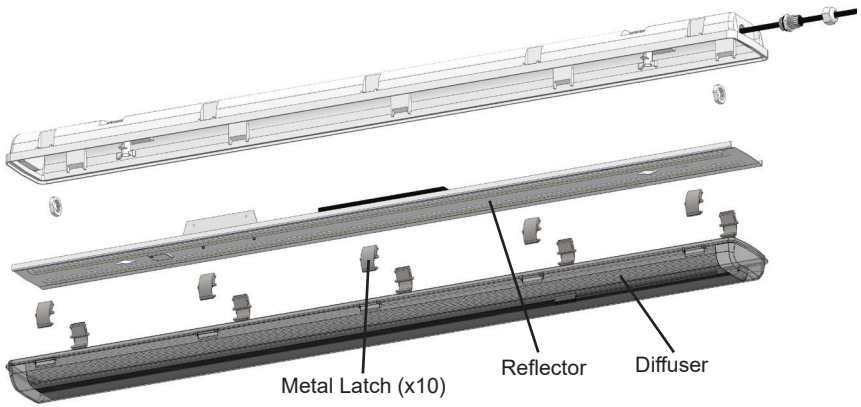

FIG 7

Rev Date: V1 08/03/2017
4400 Earth City Expy, St. Louis, MO 63045 • 866-590-3533 • superbrightleds.com

Motion Sensor Installation

1. Release Metal Latches (x10) and remove Diffuser. (FIG 8)
2. Twist Locks on Reflector and Remove Reflector. (FIG 9)
3. Firmly pull to remove Cover over wire connections. (FIG 8)

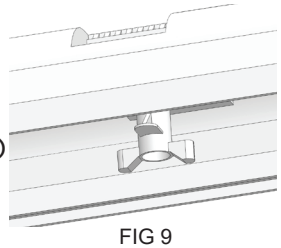

FIG 9

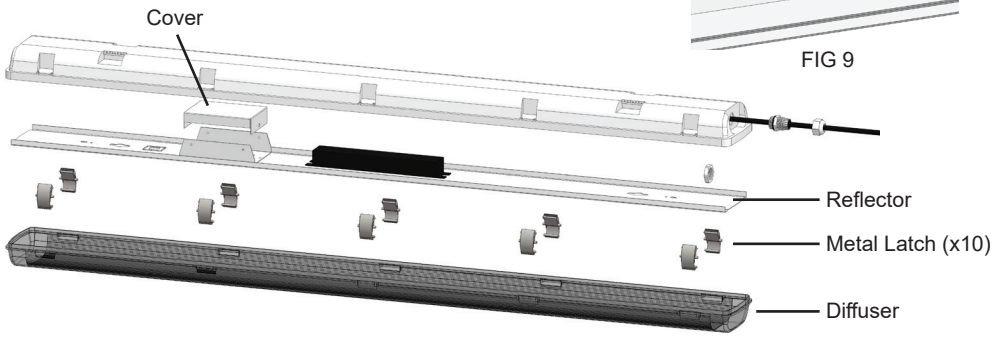

FIG 8

4. Attach Optional Motion Sensor Kit (HC403VRC-KD-SAM5) to Reflector with hardware provided.
5. Remove Sensor Cover Plate (FIG 10)
6. Bend main tabs 90 degrees. (FIG 11)

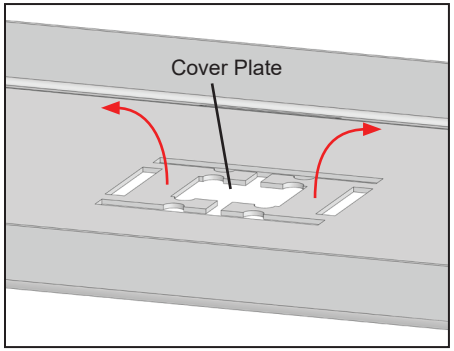

FIG 10

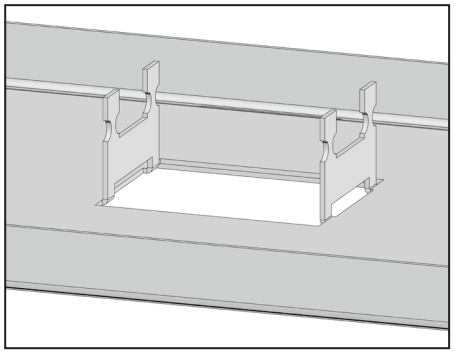

FIG 11

7. Slide Sensor into position and bend small tabs to secure. (FIG 12, 13)

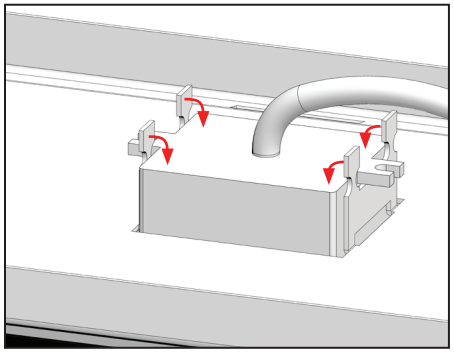

FIG 12

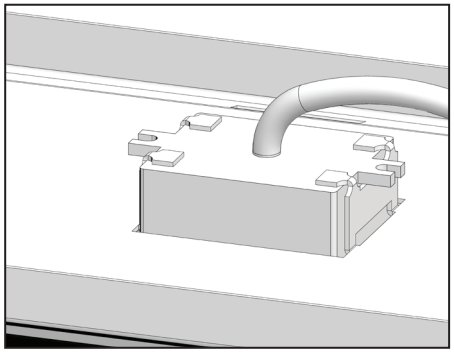

FIG 13

Surface Mount Installation (drywall ceiling)

1. Light fixture arrives out-of-box assembled.
2. Mark locations to drill for plastic anchors. (FIG 1)
3. Drill 6mm holes and insert plastic anchors.
4. Attach mounting brackets to ceiling with M4 flat washer and M4x30mm long anchor screws.
5. Attach Vapor Tight LED Fixture to Mounting Brackets by pushing fixture body onto Mounting Brackets. (FIG 2)
6. Wire fixture in accordance with national, state, local and electrical codes. Consult with an electrician.

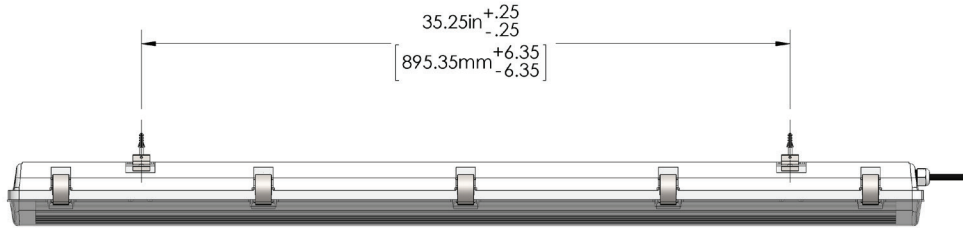

FIG 1

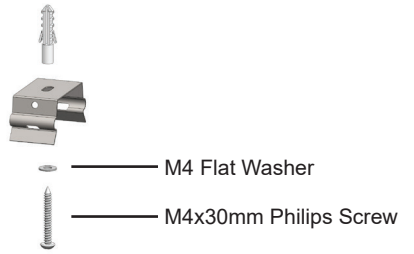

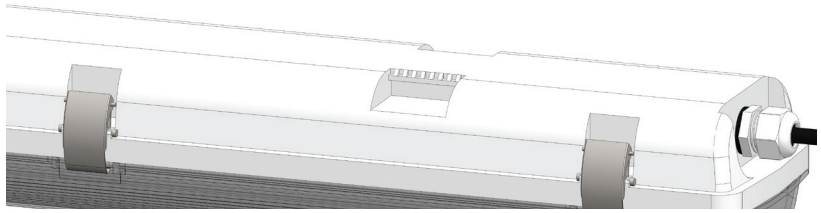

FIG 2

Rev Date: V1 08/03/2017

4400 Earth City Expy, St. Louis, MO 63045 • 866-590-3533 • superbrightleds.com