superbrightleds.com

User Manual

UHBDT Series

Important: Read all instructions prior to installation.

LED UFO High Bay Light

UHBDT-50K135H1-110

Safety and Notes

- Product should be installed by a certified electrician in accordance with applicable national, state, and local building and electrical codes.
- To reduce the risk of electric shock, ensure that the main power source and circuit breakers are switched off before performing any installation or wiring procedures.
- Avoid looking directly into the lamp when illuminated.
- Ensure all mounts are securely attached and will support the weight of the fixture. Failure to properly support the fixture may result in damage or injury, for which the manufacturer does not assume responsibility.

Specifications

Model	UHBDT-50KxH1-110
Operating Temperature	-40°F–149° F (-40°–65° C)
Environmental Rating	IP65

Check product label for specific electrical specifications related to installation. Improper installation will void warranty.

Included Parts

1 - high bay light
1 - eye bolt

Installation

1. Insert eye bolt into threaded hole on top of fixture and tighten.
2. With supply power switched off, connect wiring.
3. Hang fixture by attaching eye bolt to an existing hook or carabiner (SBL number HBU-CARB or SC-300).

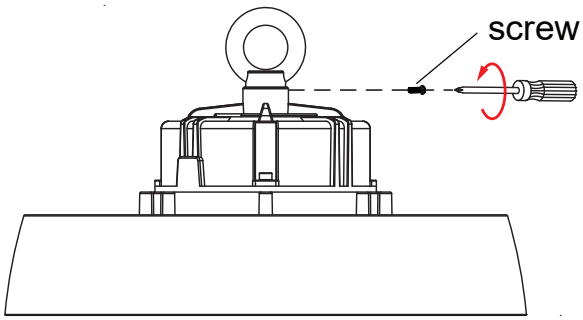
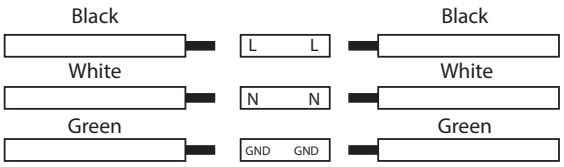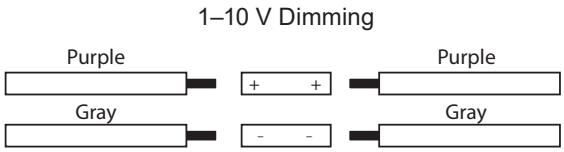
Wiring Diagram