LED Parking Lot/Area Light

ALD Series Specifications

Project_____

Date_____Type_____

ALD-50K30W-C-BRC3-FM

Available Models[2]

- ☐ ALD-50K10W-C-BRC3
- ☐ ALD-50K15W-C-BRC3
- ☐ ALD-50K19W-C-BRC3
- ☐ ALD-50K24W-C-BRC3
- ☐ ALD-50K30W-C-BRC3

Mounting Style

- ☐ -SF (Standard Knuckle Slipfitter)
- ☐ -SFS (Photocell Knuckle Slipfitter)
- ☐ -FM (Square/Round Pole Arm)
- ☐ -FB (U-Bracket/Flood)

Part Number Breakdown

Example: ALD-50K40W-B-BRC3-FM

Family	Color Temperature	Wattage	Voltage	Mount
ALD-	**50K** [5000K]	**10W** [100 W]	**C-BRC3** [120–277 VAC]	-SF -SFS -FM or -FB[3]
		15W [150 W]		
		19W [185 W]		
		24W [240 W]		
		30W [300 W]		

Description

ALD series area lights offer substantial energy savings and a variety of options to fit any application. Durable, modern design looks great and has a low EPA. Optional lenses and mounts are available to fine tune lights to individual need. Optional dusk-to-dawn photocell is available on some mounts to automate operation and reduce operating cost. ALD series area lights are great for parking lots, roadways, car dealerships, school campuses, parks, and more.

Construction

- Wide variety of mounting options available
- IP65 rated

Electrical

- 120–277 VAC
- 0–10 V dimmer compatible
- 80+ CRI
- 50,000 hour L70 lifetime

Photometrics

- 140+ lm/W
- III-M optics with other interchangeable optional lenses

Application

Easily replaces traditional shoebox area/parking lot lights. Type III-M distribution and the these ideal for many applications including factories, warehouses, and other large, high ceiling spaces.

Warranty

Five (5) Year Warranty

Certifications and Compliances

DesignLights Consortium listed as DLC 5.1 Premium, Certified by UL as suitable for wet locations, and RoHS compliant.

Optional Accessories

Mounting Options[1]

- Knuckle Slipfitter Mount (ALD-SF)
- Knuckle Slipfitter Photocell Style Mount (ALD-SFS)
- Square/Round Fixed Arm Pole Mount (ALD-FM)
- U-Bracket/Flood Mount[3] (ALD-FB)

Alternate Lenses (required quantity varies by light)

-Type II-M (ALD-LENS-2M)
-Type III-S (ALD-LENS-3S)
-Type IV-M (ALD-LENS-4M)
-Type V-M (ALD-LENS-5M)
-Nema 6x5 (ALD-LENS-NEMA-6x5)

Notes

[1] bundled with lights, but also available for purchase separately

[2] contact customer service if interested in options other than those listed

T 866.811.5550
F 314.972.6202
email: commercial-sales@superbrightleds.com
www.superbrightleds.com/cat/industrial-led-lighting/

Rev V2 Date: 01/21/2022
Specifications are subject to change without notice.
Printed in the U.S.A.

LED Parking Lot/Area Light

ALD Series Specifications

Dimensional Drawings

Lights

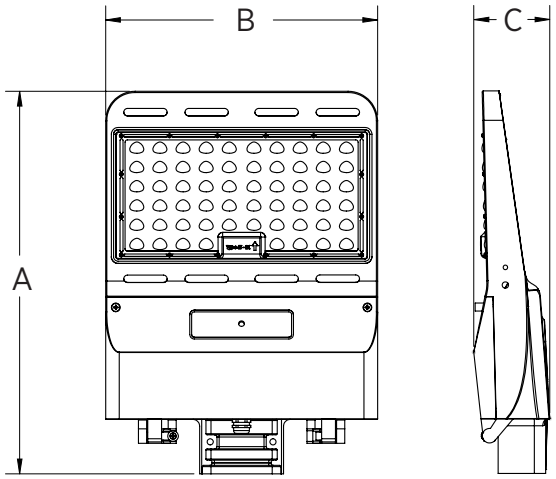

Model	Length (A)	Width (B)	Height (C)
ALD-50K10W-C-BRC3	16.9 in. (429 mm)	12 in. (305 mm)	3.5 in. (88 mm)
ALD-50K15W-C-BRC3			
ALD-50K19W-C-BRC3			
ALD-50K24W-C-BRC3	21.9 in. (557 mm)	12 in. (305 mm)	3.5 in. (88 mm)
ALD-50K30W-C-BRC3			

Mounts

ALD-SF

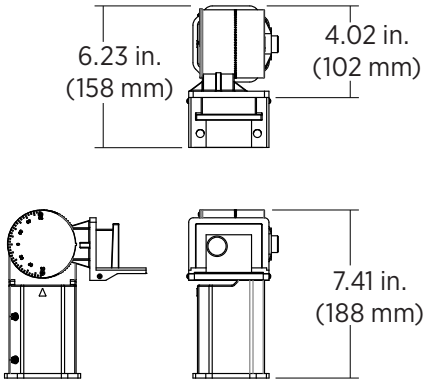

ALD-SFS

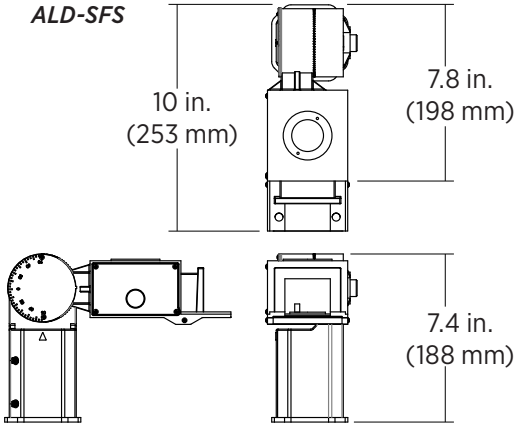

ALD-FM

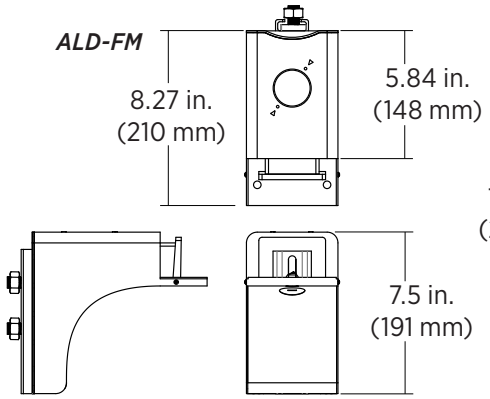

ALD-FB

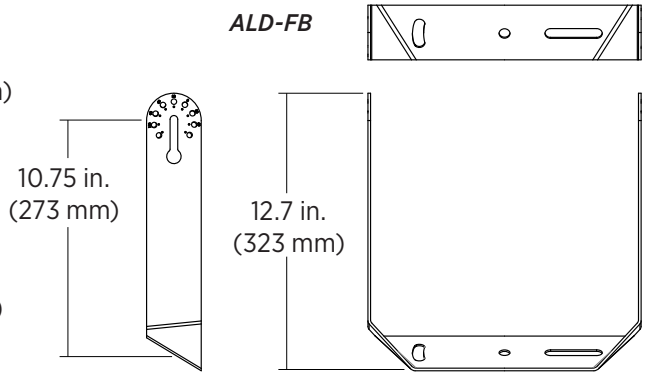

T 866.811.5550
F 314.972.6202
email: commercial-sales@superbrightleds.com
www.superbrightleds.com/cat/industrial-led-lighting/

Specifications are subject to change without notice.

superbrightleds.com

LED Parking Lot/Area Light

ALD Series Specifications

Specifications

Model **ALD-**	**xK10W-y**	**xK15W-y**	**xK19W-y**	**xK24W-y**	**xK30W-y**
Intensity	14,000 lm	21,000 lm	29,500 lm	33,600 lm	42,000 lm
Operating Voltage	120–277 VAC				
Power Consumption	100 W	150 W	185 W	240 W	300 W
Current Draw	0.83 A @ 120 VAC 361 mA @ 277 VAC	1.25 A @ 120 VAC 542 mA @ 277 VAC	1.54 A @ 120 VAC 668 mA @ 277 VAC	2 A @ 120 VAC 867 mA @ 277 VAC	2.5 A @ 120 VAC 1.08 A @ 277 VAC
Efficacy	≥140 lm/W				
Color Temperature	5000K				
Beam Pattern	III-M (other options available)				
CRI	80+				
Power Factor	≥0.9				
Dimming	0–10 V				
Environmental Rating	IP65				
Ambient Operating Temperature	-22°–131° F (-30°–55° C)				
Rated Life (L70)	50,000 hours				

[4] Add 3–4 lb (1.4–1.8 kg) for mounting bracket weight and approximately 9 oz (255 g) for photocell and photocell base.

T 866.811.5550
F 314.972.6202
email: commercial-sales@superbrightleds.com
www.superbrightleds.com/cat/industrial-led-lighting/

Specifications are subject to change without notice.

LED Parking Lot/Area Light

ALD Series Specifications

Optics

Light Distribution Pattern by Lens Type[5]

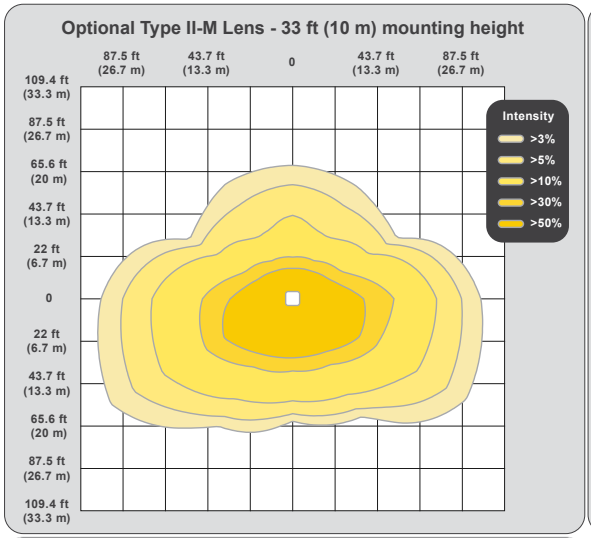

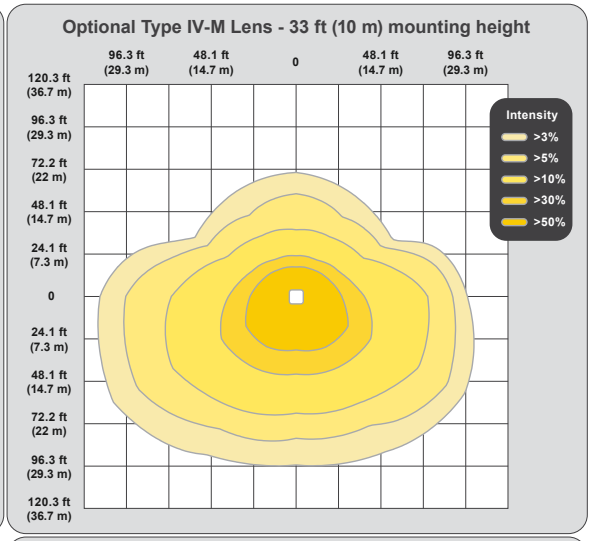

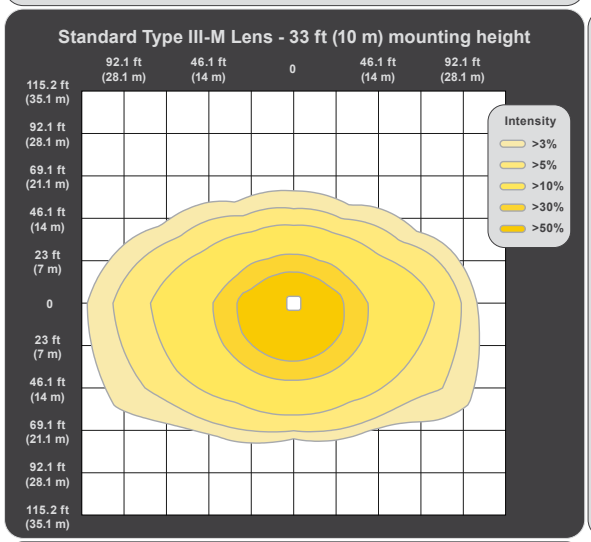

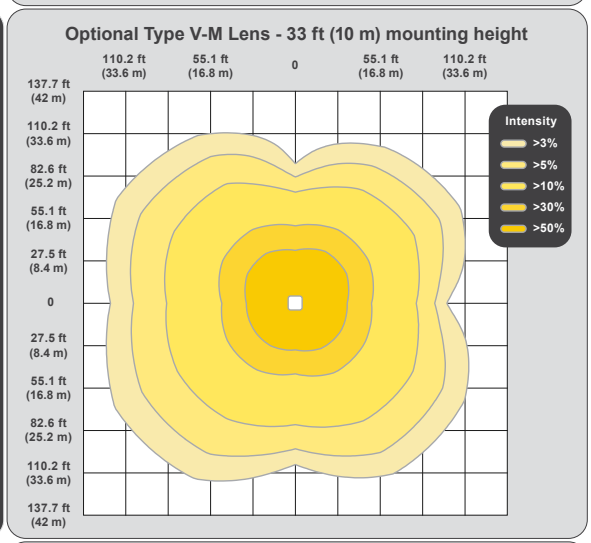

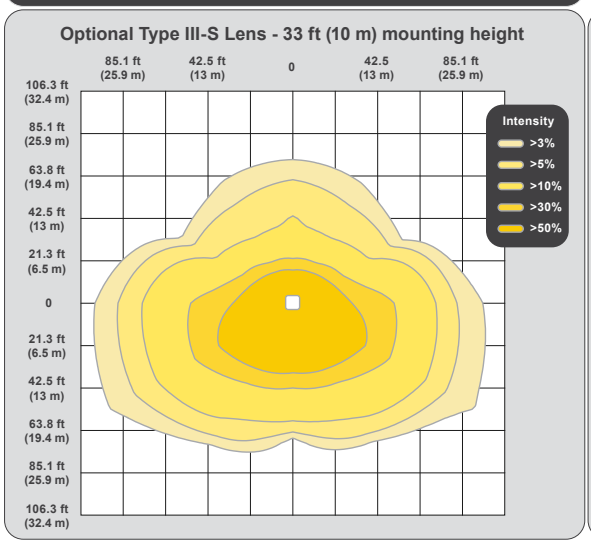

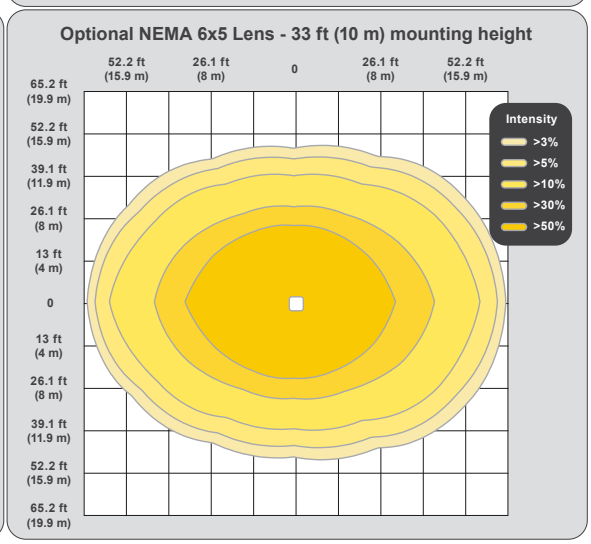

[5]Test data from 185 W light. Relative distribution similar on all models, although intensity in specific areas will vary.

T 866.811.5550
F 314.972.6202
email: commercial-sales@superbrightleds.com
www.superbrightleds.com/cat/industrial-led-lighting/

Specifications are subject to change without notice.